CIVCO Technical Data Sheet

trUpoint ARCH™

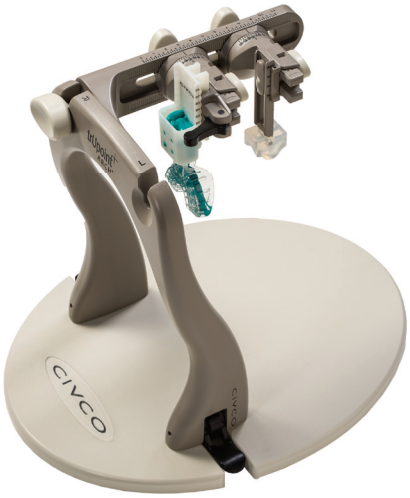

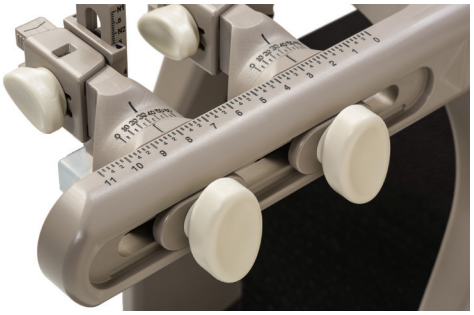

Product Name	trUpoint ARCH™ SRS/SRT System
Product Number	MTHF01
Kits that include this product	MTHF150 trUpoint ARCH Starter Kit
General Description	The trUpoint ARCH is an ideal solution for non-invasive Stereotactic Radiosurgery (SRS) and Stereotactic Radiotherapy (SRT), with multiple points of fixation for an accurate, secure hold. Now with US FDA 510(k) clearance for MR environments, trUpoint ARCH is the only option for centers planning to use MR simulation for their SRS and SRT cases. The trUpoint ARCH was designed from the ground up for SRS and SRT. It provides immobilization, positioning and repositioning for treatment of all parts of the brain, head and neck. In clinical tests the trUpoint ARCH achieved immobilization of ±1 mm and repeatability comparable to much higher priced competitor systems.
Indications for use	SRS / SRT Patient Immobilization
Unique Features	MR Clearance - 510(k) cleared as MR Safe Putty Dispenser is MR Unsafe Nasion Cushion - an additional point of fixation for better immobilization Rotatable Fixation Arm - to open up lateral beam angles from left or right
Contraindications	None
Applicable Environments	CT Simulation MR Simulation External Beam Radiation Therapy Treatment

CIVCO MEDICAL SOLUTIONS
Radiation Oncology

FDA Clearance	Yes
CE Marked (EU DOC)	Yes
Other Country Registrations	Available upon request

Technical Details

Primary Materials	Acetal (Black & Cream)	
Density	1.41 g / cm^3	0.815 oz / in^3
Weight (approx)	1.81 kg	4 lbs
Dimensions (mm, in) (±5%)	min: 269 x 230 x 309mm max: 269 x 283 x 368mm	min: 10.60 x 9.06 x 12.19 in max: 10.60 x 11.13 x 14.48 in

Technical Drawing

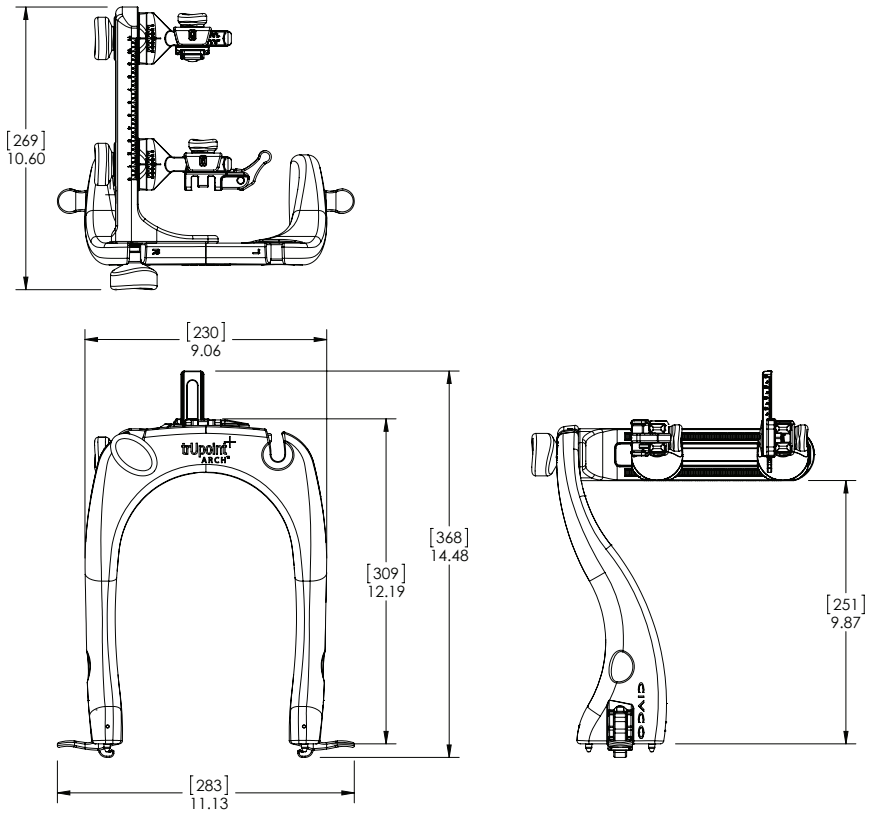

Country of Manufacture	USA

CIVCO MEDICAL SOLUTIONS
Radiation Oncology

Clinical Data

Intrafraction Motion (immobilization)		N (# samples)	Mean (mm)	Std Dev (mm)
	Lateral	188	0.00	0.30
	Longitudinal	188	-0.01	0.30
	Vertical	188	-0.04	0.26
Interfraction Motion (daily shift corrections)		**N (# samples)**	**Mean (mm)**	**Std Dev (mm)**
	Lateral	248	-0.13	1.41
	Longitudinal	248	0.04	1.47
	Vertical	248	-0.18	1.03

Data above generated from patient studies conducted by the University Hospital of Zurich (Universitätsspital Zürich)

Packaging

Unit Pack	1 Piece
Units / Box	1 Piece
Shelf Life	Not Applicable
Warranty	See CIVCO website for Product Warranty Statement
Sterilization	Non-Sterile
Launch Date	February 2013

Related Products

Comptible Extensions, Baseplates & Overlays	Item #	Description
	MTIL6668	UCTLE SRS Posifix® Extension
	108072	MI iBeam Baseplate (with redesigned latches)
	108070	MI iBeam Baseplate (with legacy latch design)
	108020	Posifix SRS IMRT Extension
	101019	Posifix-1 Acrylic SRS Overlay

Compatibility Note: Posifix iBeam Overlay Adapters ordered prior to January 2014 may not be compatible with the trUpoint ARCH, please discuss with your sales representative for further details.

CIVCO MEDICAL SOLUTIONS
Radiation Oncology

Kit Configurations	Item #	Description	Qty
	MTHF01	trUpoint ARCH	1
	101019	Posifix®-1 Acrylic SRS Overlay	1
	MTHF300	trUpoint ARCH Storage Plate	1
	970031	LPR31 SRS Thermoplastic Masks (10)	1
	MTIHS01	Individual Head Support	10
	MTHF225	Bite Putty (12 applications)	1
	MTHF135	Bite Cups (12)	1
	20HF033	Bite Trays (12)	1
	MTHF016	Nasion Cushions (12)	1
	MTHF200	Putty Dispenser	1

Committed to Positively Impacting Patient Care

Global Offices
Orange City, Iowa, USA
800.842.8688 | +1.712.737.8688
Rotterdam, Netherlands
+31 (0) 10.3036600
inforo@civco.com
www.civco.com/ro

COPYRIGHT © 2016 CIVCO AND POSIFIX ARE A REGISTERED TRADEMARKS OF CIVCO MEDICAL SOLUTIONS.TRUPOINT ARCH IS A TRADEMARK OF CIVCO. ALL OTHER TRADEMARKS ARE PROPERTY OF THEIR RESPECTIVE OWNERS.ALL PRODUCTS MAY NOT BE LICENSED IN ACCORDANCE WITH CANADIAN LAW. 2015C0963 REV. D

CIVCO MEDICAL SOLUTIONS
Radiation Oncology