ArcCHECK® & 3DVH®

The Ultimate 4D Patient QA Solution

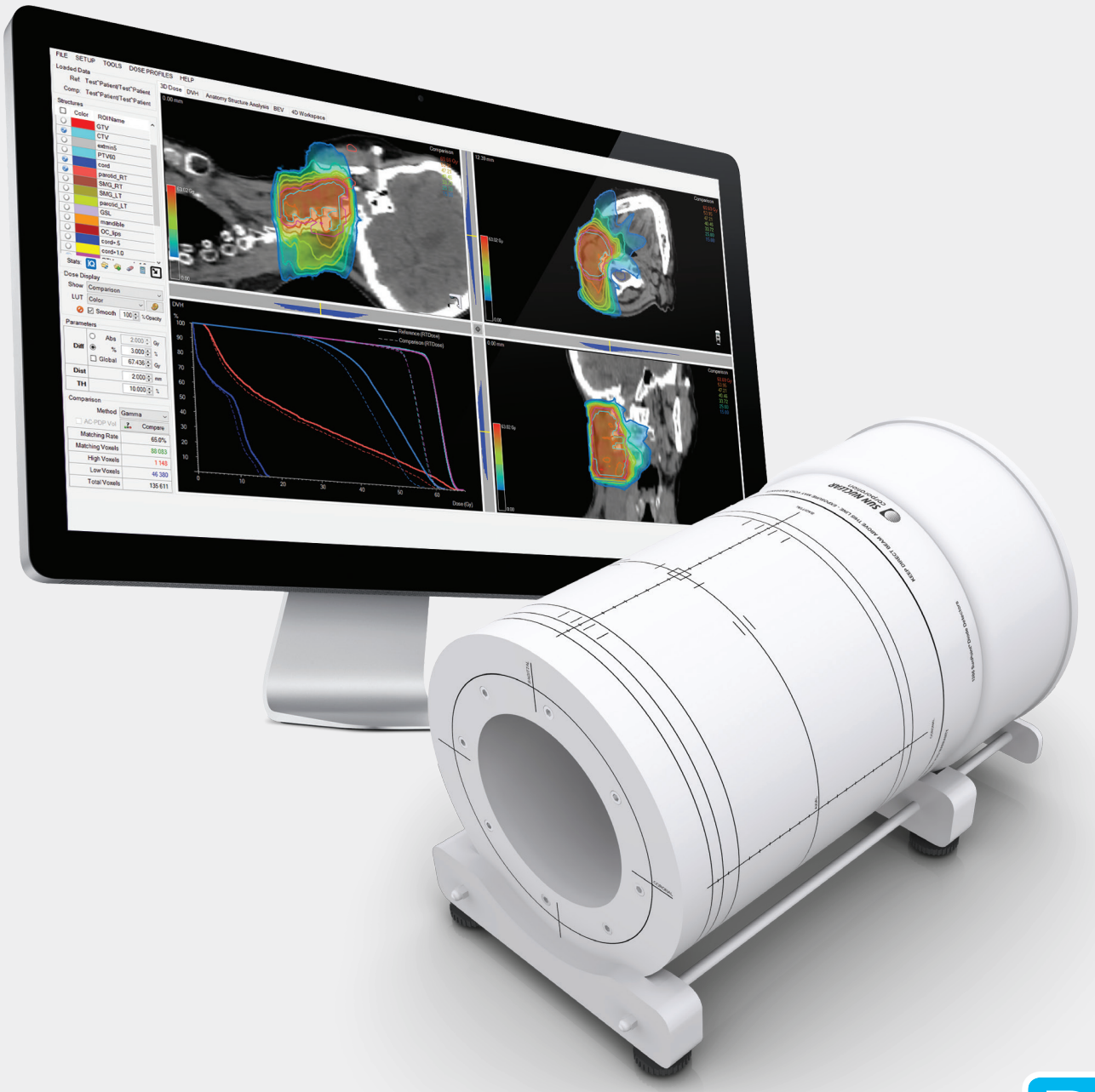

PATIENT

SUN NUCLEAR corporation

Your Most Valuable QA and Dosimetry Tools

THE 4D QA GOLD STANDARD

The ArcCHECK® is the world's most selected independent 4D measurement array. Simply connect the single cable which supplies both power and data, and start to measure. No background measurements, no warm-up, no separate inclinometers, no additional hardware rotisseries. It's that simple, and that powerful.

Pa
PATIENT

Volumetric Measurement QA for Patient Plan, Dose and Machine Testing

ArcCHECK is the only true 4D array specifically designed for QA of today's modern rotational deliveries. At its heart are over 1,300 SunPoint® Diode Detectors providing consistent and highly sensitive measurements for all gantry angles, with no additional hardware required. Independent absolute dose measurements enable the gold standard for stringent and efficient patient plan and machine QA testing.

Patient Plan QA

Stringent, fully independent measurement QA of patient plan and delivery with SNC Patient software

Dose and DVH QA

Full 3D Dose reconstruction for target and OAR DVH QA with 3DVH® software

Machine QA

Dynamic machine QA testing routines are provided for a wide variety of tests with SNC Patient software

Hardware

ArcCHECK embodies the spirit of independent Medical Physics measurement.

- 1,386 SunPoint Diode Detectors (0.019 mm^3)
- Consistent Beams Eye View (BEV) for all gantry angles measuring entrance and exit dose
- Real-time electrometer measures every pulse, as well as composite and sub-arcs
- Interior cavity allows wide range of detector and tissue equivalent inserts

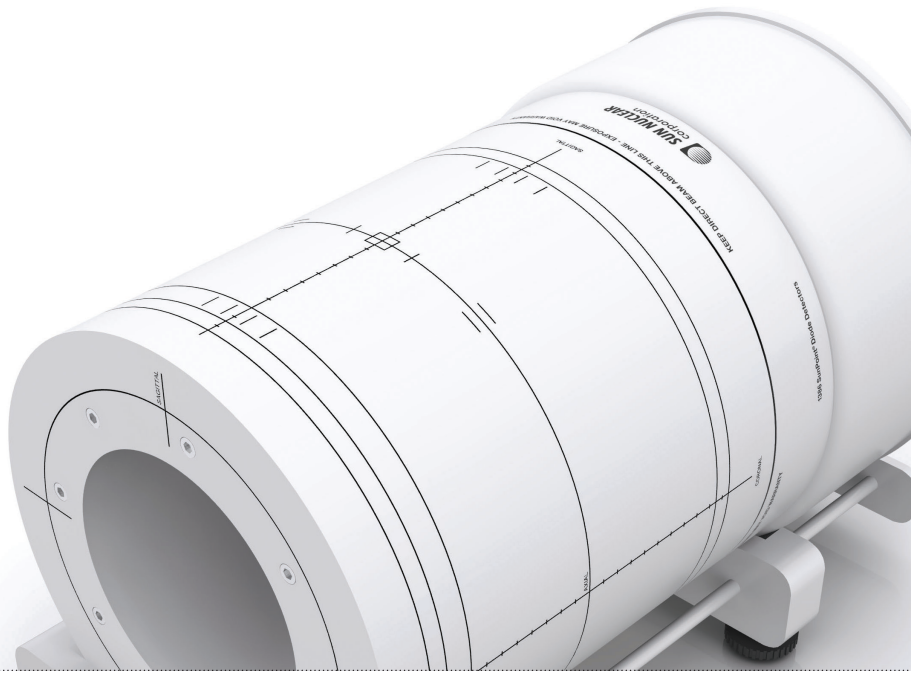

See the Entire Picture

An Ideal Geometry

Phantoms are ideally shaped like a patient. The cylindrical design of ArcCHECK intentionally simulates patient geometry to better match reality.

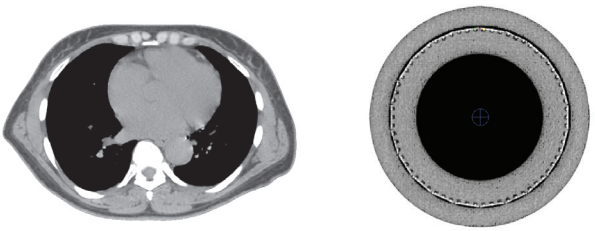

ArcCHECK detectors are always facing the delivery beam regardless of gantry angle. The detector geometry relative to the BEV remains constant. Detection of very small gantry angle errors is possible. In contrast, when a 2D array is irradiated obliquely, the geometry collapses to 1D. Even when there is no detector shadowing effect, significant information is lost on a 2D array, and errors up to 10° are missed 75% of the time.[1]

With ArcCHECK, gantry angle, leaf-end position, absolute dose, and time (4D) are measured and correlated to identify sources of error. Dose accuracy is improved and errors can be traced to the treatment planning system, the delivery system, or the imaging system.

What You See with a 2D Array

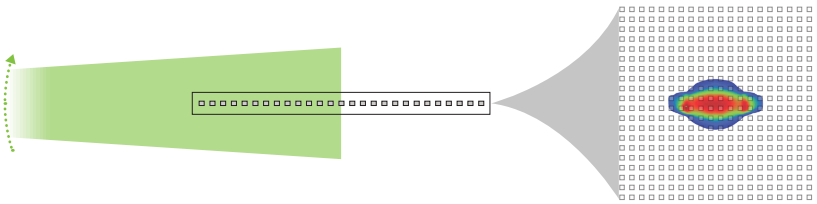

2D Array Measurement

An inherent limitation of 2D arrays is an inability to capture all of the dose information for rotational deliveries.

What You See with ArcCHECK

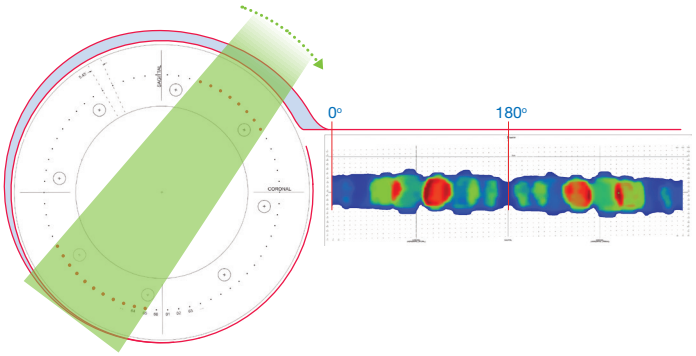

ArcCHECK Measurement

ArcCHECK displays BEV dose distribution throughout the entire arc delivery. More data is available to perform a more thorough QA analysis.

1. *Hauri, P et al., "Clinical evaluation of an anatomy-based patient specific quality assurance system," JACMP, 15, 2 (2014)*

Interior Measurements

Pa PATIENT

Measuring completely around the isocenter in a uniform manner for each angle is a more stringent measurement than a simple composite dose at the isocenter. Errors visible in the isocenter are also visible in the surrounding dose measurements, but in more detail.

ArcCHECK measures entry and exit dose for every angle. For each beam angle, ArcCHECK measures high dose regions at the entrance and low dose regions at the exit, detecting potential delivery and TPS modeling errors for both high and low dose levels. For those who would like to measure the dose at isocenter or elsewhere within the cavity, Sun Nuclear offers the versatile MultiPlug™ and CavityPlug™ with detector insert capabilities.

MultiPlug™

- Hounsfield Unit (HU) conversion testing
- Tissue equivalent inserts:
  - Brain
  - Bone
  - Breast
  - Liver
  - Lung
  - Muscle
  - Apidose
  - Titanium
  - Water/Air
- Dose in up to 25 locations
- Film cassette insert
- Bezel angle indicator for rotation within cavity
- Precision milled detector holder included
  - Solid insert included to achieve solid cavity

CavityPlug™

- Precision fitted to ArcCHECK cavity
- Measure dose in cavity center
- Precision milled detector holder included
  - Solid insert included to achieve solid cavity

Helical Detector Grid

Detectors are arranged on a HeliGrid™ which increases the sampling rate and reduces BEV detector overlap and shadowing.

- An ArcCHECK 10 x 10 cm^2 area contains 221 detectors; equivalent to the detector density in a MapCHECK® 2
- Entrance and exit dose are measured, effectively doubling the detector density in the measurement field

Beam Delivery

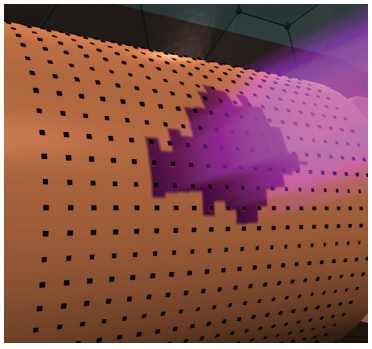

ArcCHECK Detector BEV

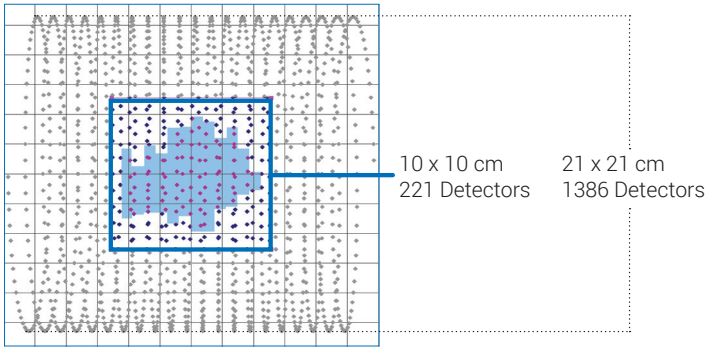

Virtual Inclinometer™

ArcCHECK calculates gantry angle independently using entrance and exit dose.

- Virtual Inclinometer is accurate to ±1°[2]
- Avoids additional inclinometer cables and mounting to the delivery system.

Easy Setup

ArcCHECK contains a sophisticated yet easy to use leveling system that ensures a quick and accurate setup.

- Built in rotation and tilt inclinometers, the leveling LEDs relay setup status in real-time.

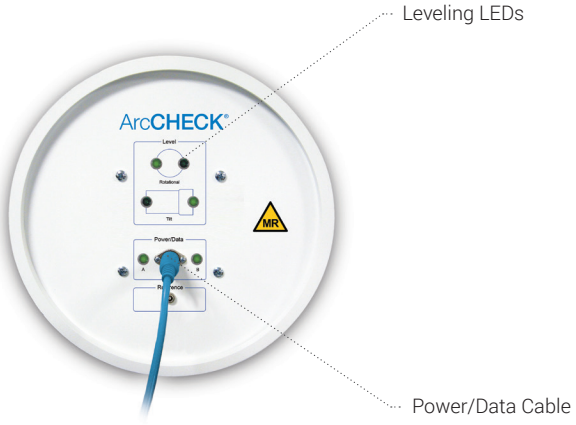

Large Fields

Two ArcCHECK measurements can be combined in SNC Patient software for larger field sizes.

Small Fields

Merge feature provides 442 detectors within a 10x10 field.

2. *Kozelka, J. et al., "Optimizing the accuracy of a helical diode array dosimeter," Med. Phys., 38, 9 (2011)*

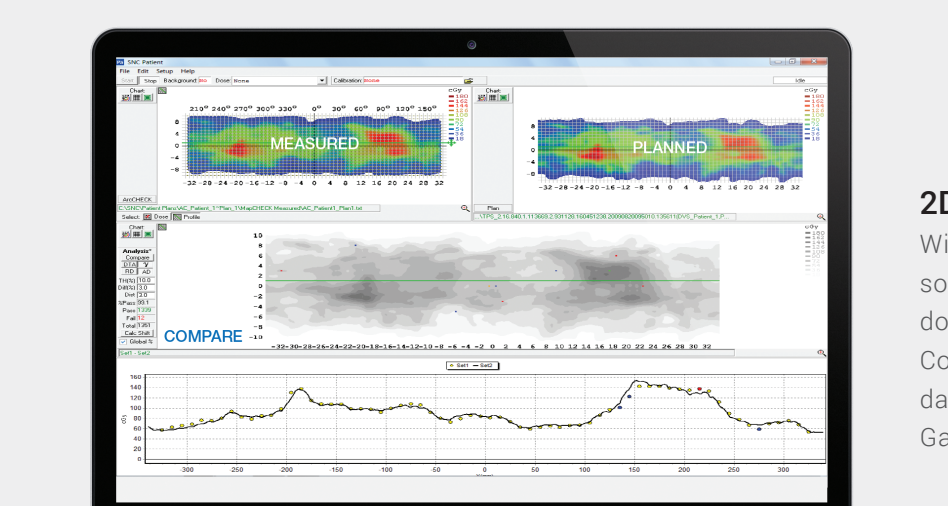

2D Dose Analysis

With a single mouse click, SNC Patient software compares measured ArcCHECK dose points to planned dose points. Compare normalized data or absolute dose data using Distance to Agreement (DTA), Gamma (γ), and Gradient Compensation.

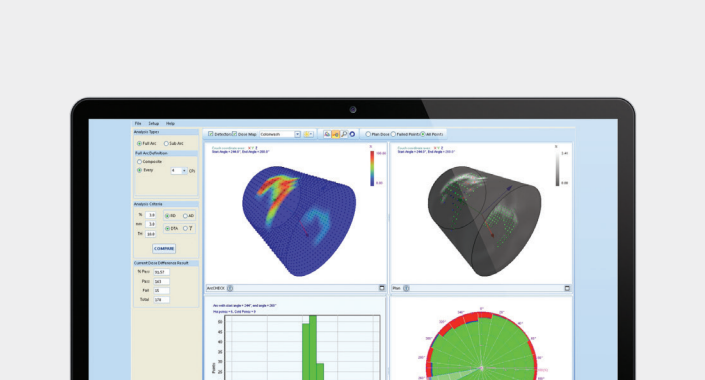

VMAT / Control Point Analysis

Individual control points and user-defined arc sections can be analyzed for a full arc or sub arc. A 360° presentation of pass, low, and high dose summary for the defined control point range and sub arcs is presented.

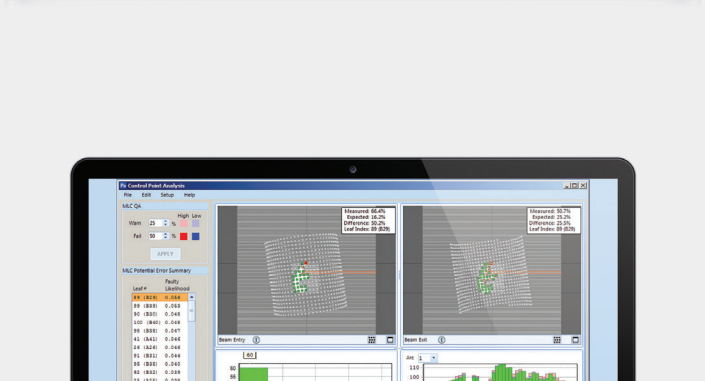

MLC Analysis

Evaluate the difference between the planned and delivered MLC pattern, and identify leaves that may indicate required service. Additional machine QA tests are also included.

3DVH®

Clinically Relevant Patient Specific QA

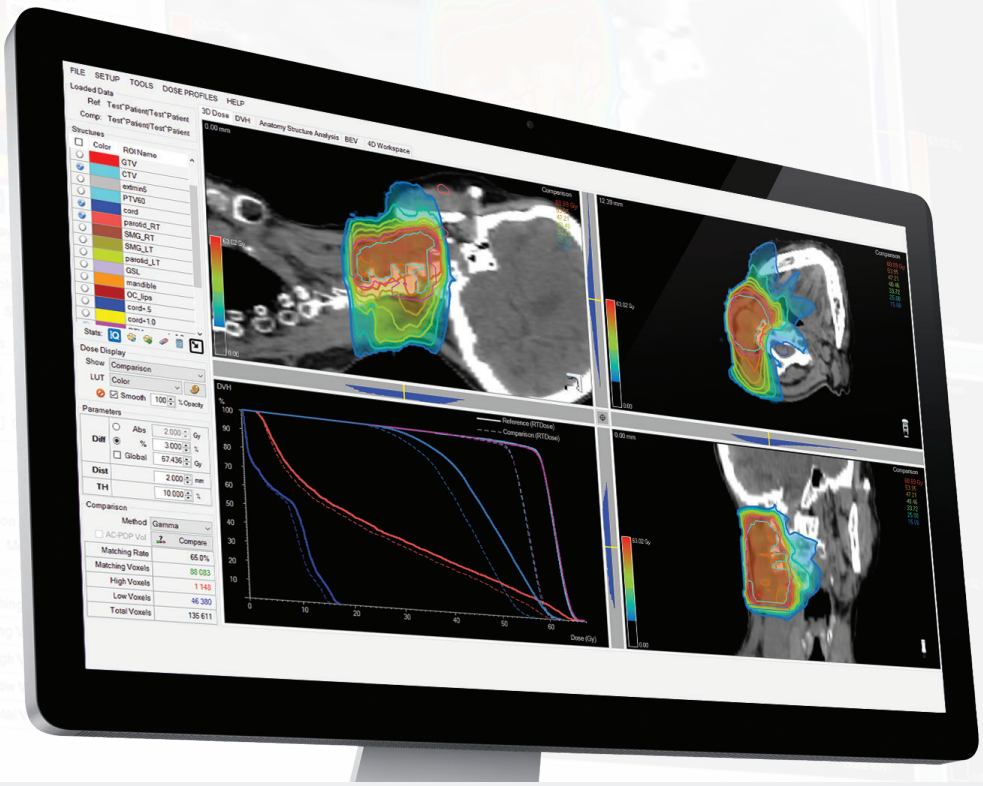

Phantom Evolution

3%/3mm criteria showing 99.2% passing rate, a good test of deliverability and machine performance.

U.S. Patent No. 7,945,022

3DVH uses ArcCHECK QA measurements to estimate 3D dose to the patient geometry.

- Perform 3D dose and DVH QA analysis on patient – not phantom – geometry
- Identify TPS and beam delivery errors
- Supports coplanar and non-coplanar beams

> *Sun Nuclear's 3DVH software offers a unique quality assurance tool for patient specific IMRT QA. Testing was conducted for IMRT plans where we introduced known errors in both absolute dose and geometry of the delivered fields. These differences were accurately detected and reported by 3DVH and gave us a high degree of confidence in the system's ability to detect treatment delivery errors. The system also revealed that where beams may "pass" in a 2D analysis, regions of failure and match were more clearly revealed in a 3D analysis.*
>
> **Kym Rykers, Ph.D.**
>
> Chief Radiation Oncology Physicist, Austin Health, Australia

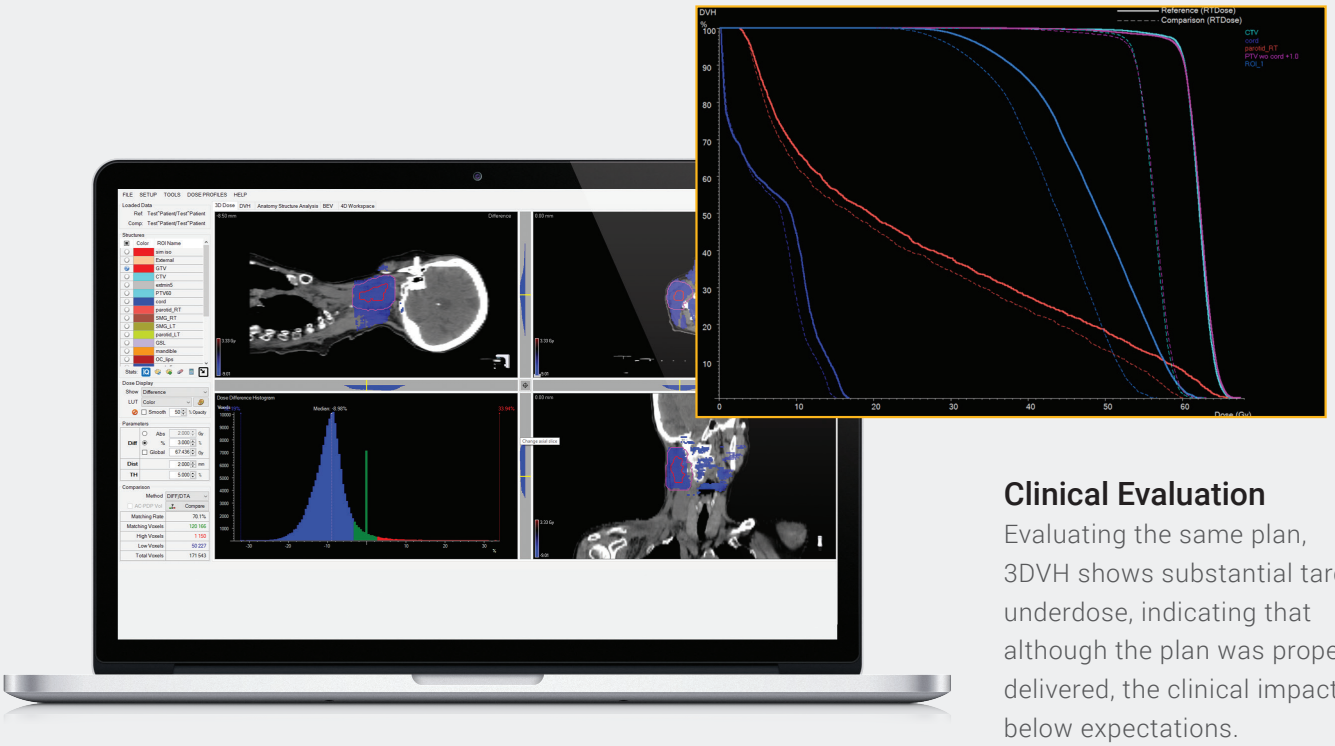

Clinical Evaluation

Evaluating the same plan, 3DVH shows substantial target underdose, indicating that although the plan was properly delivered, the clinical impact was below expectations.

Respiratory MotionSim™

Simulate the dosimetric impact of target motion with proven accuracy.

- Evaluate motion impacts on 3D Dose and DVH
- Determine if motion management is necessary, and to QA motion management plans
- Use existing QA measurements and avoid bulky mechanical motion phantoms

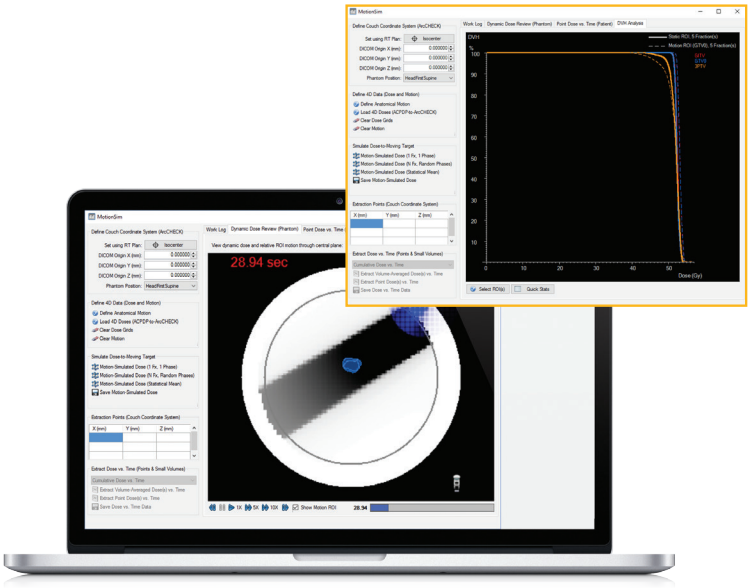

Machine QA Analysis

Use ArcCHECK for a wide variety of machine QA tests in dynamic and rotational mode

- Dynamic Gantry Rotation QA*
- Dynamic Gantry Angle QA*
- Dynamic Gantry Speed QA
- Dynamic Symmetry and Flatness*
- MLC QA
- Treatment Reproducibility QA

*Also available with static angles

Selected Publications

ArcCHECK® Accuracy Studies

Robotic radiosurgery system patient-specific QA for extracranial treatments using the planar ion chamber array and the cylindrical diode array

M. Lin et al., JACMP. **16** (4), 2015

- Compares Angular Dependence, Detector Accuracy, and Sensitivity to various errors
- Confirms diode accuracy for small-field measurements

A comparison of the gamma index analysis in various commercial IMRT/VMAT QA systems

M. Husseina et al., Radiotherapy and Oncology **109** (3), (2013)

- "Out of all the systems, ArcCHECK measurements exhibited the closest statistical agreement with the predicted gamma index.."

Optimizing the accuracy of a helical diode array dosimeter: A comprehensive calibration methodology coupled with a novel virtual inclinometer

J. Kozelka et al., Med. Phys. **38** (9), (2011)

- Validates ArcCHECK: Field size dependence, angular dependence, dose rate dependence, and intrinsic relative sensitivity (array calibration) factors, along with Virtual Inclinometer.

3DVH® Accuracy Studies

VMAT QA: Measurement-guided 4D dose reconstruction on a patient

B. Nelms et al., Med. Phys. **39** (7), (2013)

- Comprehensive explanation of the AC-PDP algorithm.
- Accuracy study with multiple ion chambers and film planes.

Moving from gamma passing rates to patient DVH-based QA metrics in pretreatment dose QA

H. Zhen et al., Med. Phys. **38** (10), (2011)

- Evaluation of 3D Gamma as a clinical metric versus 3D volumetric analysis.
- Accuracy study using a white box test.

Learn more at sunnuclear.com/publications

3DVH® Clinical Studies

Using a Novel Dose QA Tool to Quantify the Impact of Systematic Errors Otherwise Undetected by Conventional QA Methods: Clinical Head and Neck Case Studies

M. Chan et al., Technology in Cancer Research & Treatment **13** (1), (2014)

- Discovered both systematic and patient specific errors using 3DVH that were missed by Gamma QA. Used both EPIDose and film to verify all 3DVH discovered errors were true.
  - *"The authors found that the Gamma criterion of 3%/3mm (or 2%/3mm) was too lenient to detect systematic errors, especially when used in TPS commissioning."*
  - *"Our study has confirmed the importance of advancing from phantom Gamma-based to patient DVH-based IMRT dose QA. Other researchers have come to this conclusion as well."*
  - *"Most of these errors would not be discovered in routine QA. Each potential source of error found by 3DVH has been verified to be relevant and true." (Verified with film and EPIDose)*

Evaluating IMRT and VMAT dose accuracy: Practical examples of failure to detect systematic errors when applying a commonly used metric and action levels

B. Nelms et al., Med. Phys. **40** (11), (2013)

- Four separate hospitals submitted an article on errors they discovered using 3DVH but were missed by conventional planar Gamma analysis.

Sensitivity of volumetric modulated arc therapy patient specific QA results to multileaf collimator errors and correlation to dose volume histogram based metrics

L. Coleman et al., Med. Phys. **40** (11), (2013)

- Concludes that 5% DVH errors are missed with Gamma only analysis and that volumetric analysis is recommended for VMAT QA.
  - "It is recommended that the sole use of gamma index for Rapidarc QA plan evaluation could be insufficient and a methodology for evaluation of delivered dose to patient is required."

Specifications

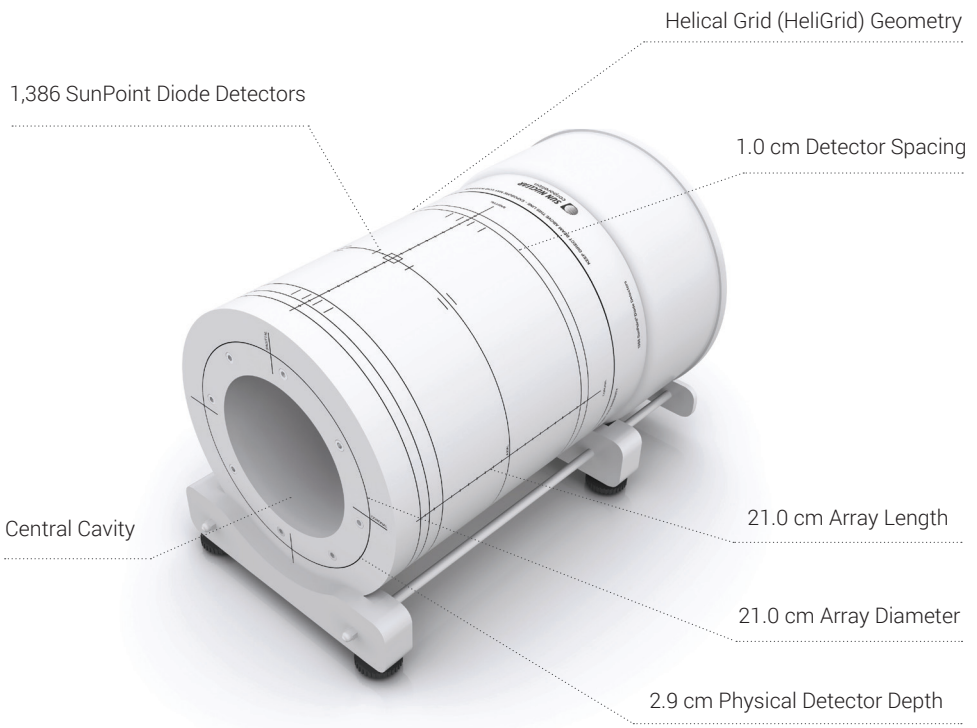

Optional ArcCHECK Trolley can help ensure smooth transport of array and cradle. Narrow 18" width fits tight spaces, and shelf has been designed to slide away when cradle feet are positioned on the treatment couch.

Detector Type:	SunPoint® Diode Detectors
Detector Quantity:	1,386
Detector Spacing (cm):	1.0
Array Diameter (cm):	21.0
Array Length (cm):	21.0
Cavity Diameter (cm):	15.0
Inherent Buildup (g/cm²):	3.3
Inherent Backscatter (g/cm²):	3.3
Detector Physical Depth (cm):	2.9
Array Geometry:	Helical Grid (HeliGrid) 1 cm offset
Phantom Material:	PMMA (Acrylic)
Active Detector Area (mm²):	0.64
Detector Sensitivity (nC/Gy):	32.0
Max Dose/Pulse (Gy):	0.003
Detector Volume (mm³):	0.019
Detector Stability:	0.5% / kGy at 6 MV

Dose Rate Dependence:	± 1%, 75 - 250 cm SSD
Update Frequency (ms):	50
Number of Connection Cables:	Single power/data cable
Dimensions (cm²):	27.0 x 43.0
Weight (kg):	16.0

System Requirements (SNC Patient, 3DVH)

Operating System:	Windows XP, Windows 7, Windows 8.1, Windows 10
CPU:	Recommended 2.4 GHz or better, multi-core (2 or more cores)
RAM:	Recommended 4 GB or more
Hard Drive Space:	Recommended 5 GB or more

Compatibility

FFF:	Yes

Pa PATIENT

sunnuclear.com // +1 321 259 6862
Corporate Headquarters: 3275 Suntree Boulevard, Melbourne, FL 32940 USA

All data used is best available at time of publication. Data is subject to change without notice. ©2016 Sun Nuclear Corporation. All Rights Reserved.